SLEEVE ASSEMBLY FOR RECESSED 4" STACK FITTING

4" PROSET FIRE RATED PENETRATIONS THROUGH CONRETE FLOORS

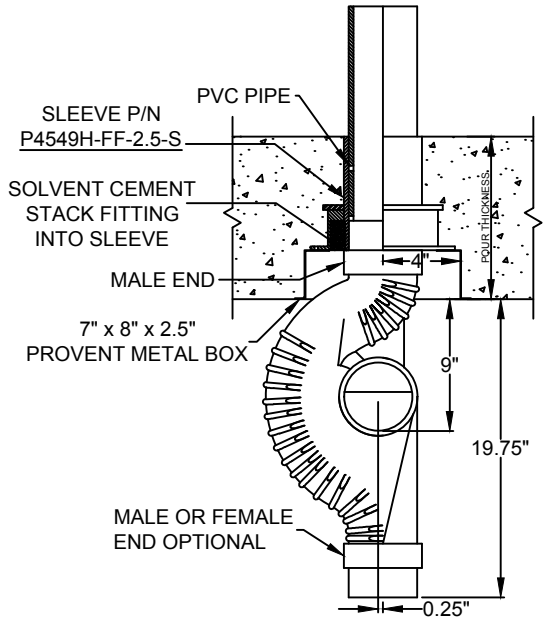

P4549H-FF-2.5-S $72.60
4" Stack Top is Male

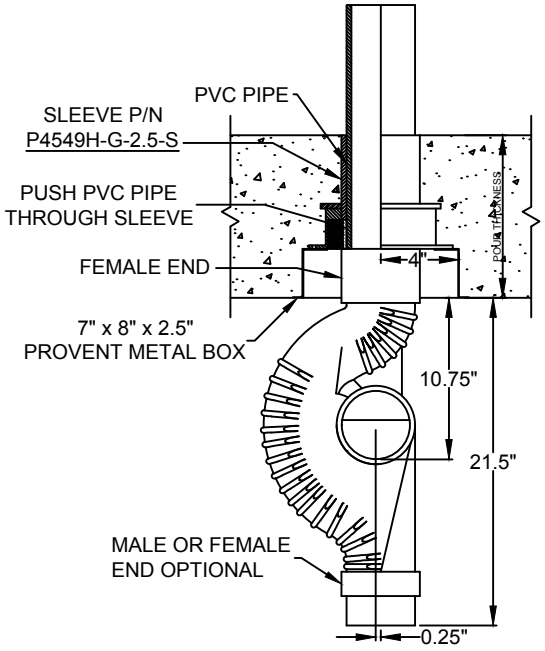

P4549H-G-2.5-S $70.20
4" Stack Top is Female

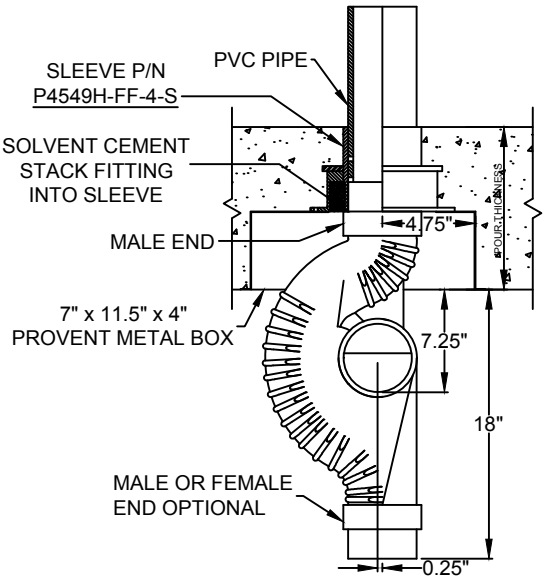

P4549H-FF-4-S $72.60
4" Stack Top is Male

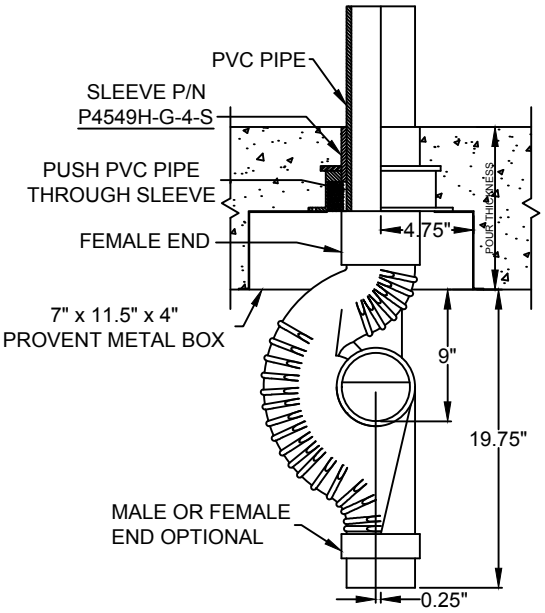

P4549H-G-4-S $70.20
4" Stack Top is Female

REDUCE INVERT ELEVATION BY $\frac{1}{2}$" FOR 3" BRANCH

W.H. Directory Reference 00 Edition
Firestop Device
W.H. Design No. PS/PHV 180-03
F Rating 3 Hrs.

PROSET® SYSTEMS
FIRESTOP PENETRATOR™

DATE : 5-31-21

DRG . NO . C-9049-4R